Australian Journal of Basic and Applied Sciences, 8(3) March 2014, Pages: 459-466

AENSI Journals

Australian Journal of Basic and Applied Sciences

ISSN:1991-8178

Journal home page: www.ajbasweb.com

ECG Baseline Drift Elimination Using Wavelet Packets Transform

[1]Afroz, [2]Z.A. Jaffery, [3]Khalil Ahmad

[1]*Department of Mathematics, Zakir Husain Delhi College, University of Delhi, New Delhi-110002, India.*
[2] *Departments of Electrical Engineering, Jamia Millia Islamia, New Delhi-110025, India.*
[3]*Department of Mathematics, Jamia Millia Islamia, New Delhi-110025, India.*

ARTICLE INFO

Article history:
Received 1 January 2014
Received in revised form 20 March 2014
Accepted 25 March 2014
Available online 2 April 2014

Keywords:
Wavelets, Wavelet Packets, Baseline drift, Thresholding, ECG Signal

ABSTRACT

In this paper a new approach for removal of baseline drift components of electrocardiographic (ECG) signals based on the wavelet packet transform has been used. This approach removes the low frequency components without introducing distortions in the ECG signal.

To Cite This Article: Afroz, Z.A. Jaffery, Khalil Ahmad., ECG Baseline Drift Elimination Using Wavelet Packets Transform. ***Aust. J. Basic & Appl. Sci.,*** *8(3): 459-466, 2014*

INTRODUCTION

Heart disease is one of the leading causes of death in the world. The majority of this is due to coronary heart disease (CHD). It is estimated that the economic cost of CHD alone is about $142.5 billion in US (Thom, T., 2006). The electrocardiographic (ECG) signal is the electrical representation of the heart's activity and provides valuable clinical information about the performance of the heart. It is generated as myocardial tissues making up the heart constrict and relax under the regulation of the heart's impulse conduction system.

In electrocardiographic signals, baseline drift is one of the problem that can influence the accurate diagnosis of heart diseases, such as ischemia and arrhythmia. Muscle contraction, and electrode impedance changes due to movement of the body are the important sources of baseline drift in most types of ECG recordings. Detection of ischemia can be achieved by analyzing the ST segment of the ECG and, in some cases, the analysis may be influenced by slow baseline drift and noise (Heart, J., 2002). Additionally, the determination of an accurate ECG baseline is generally needed for the localization of ventricular arrhythmias with body surface potential mapping (Berbari, J.E., 2000). The comparison of isopotential maps from different beats requires reliable determination of the baseline to achieve reproducible and consistent results. The importance of baseline correction for the reconstruction of activation time imaging from electrocardiographic mapping is indicated in (Zhang, D., 2005).

Many methods of removing the artifacts in ECG were proposed in last two decades (Daqrouq, K., 2005; Sayadi, O., B.S. Mohammad, 2007). In cubic spline method has been used for the estimation of baseline drift in ECG signal. This is a non linear method and performance of this method depends on the knots determination accuracy. The main disadvantage of this method is estimating undesirable signal distortion due the overlapping of signal and disturbance. The interferences are estimated but the useful important components of ECG signal are removed.

In (Pandit, S.V., 1996), a linear filtering approach has been used. In this approach the high pass filter with 0.5 Hz cut off frequency can be used to remove the interference of baseline wander which can filter out signal components with frequency below 0.5 Hz while frequency above 0.5 Hz are preserved. Non-linear phase filters are usually avoided because they can introduce significant distortions to the ECG signal and, consequently, increases the chance of heart disease misdiagnosis.

Adaptive filtering that has been also used to estimate baseline drift. This filtering makes the assumption that extremities of the features of the signal are known. The adaptive techniques first applies in combination of a least mean square driven adaptive impulse correlated filter and a two stage cascade filter for the removal of baseline wandering. This technique requires detection of QRS complex and the transfer function of the cascade filter (Arunachalam, S.P., L.F. Brown, 2009). Another draw back in these filters is slow tracking properties.

Corresponding Author: Afroz Ahmad, Deptt. of Mathematics, Zakir Husain Delhi College, University of Delhi, New Delhi-110002, India.
E-mail: afrozjmi123@gmail.com

Discrete time frequency transform has also been used to estimate base line drift. In (Min Dai and Shi-Liu Liana, 2009), short time Fourier transform (STFT) has been used to estimate the presence of baseline drift in ECG signals, which can then be removed using a time varying filter. Two problems may be identified by using this approach. First, the STFT uses a window of constant length which needs to be properly chosen and which fixes the resolution both in time. Second, the redundant STFT is used only for estimation of the baseline drift.

Our approach used based on the wavelet packet transform remove the baseline drift successfully and computationally less intensive then the approach based on the STFT described on (Min Dai and Shi-Liu Liana, 2009). Additionally, because the wavelet packet transform decomposes the signal at different scales, the size of the window can be easily adopted to signal by changing the number of levels in the decomposition. This approach of wavelet packet transform makes more convenient to remove baseline drift than the STFT approach. This approach to remove baseline drift based on the wavelet packet transform assumes that the optimal correction must satisfy the following two requirements. First, it must remove the low- frequency elements that are not related to the cardiac electrical activity; and second, it must preserve the shape and amplitude of the PQRST complexes.

2 ECG Characteristics:

The electrocardiogram (ECG) describes the electrical activity of the heart. It is obtained by placing electrodes on the chest, arms and legs. With every heartbeat, an impulse travels through the heart, which determines its rhythm and rate and causes the heart muscle to contract and pump blood. The voltage variations measured by the electrodes are cause by the action potentials of the excitable cardiac cells, as they make the cells contract. The ECG is characterized by a series of waves whose morphology and timing provide information used for diagnosing diseases reflected by disturbances of the electrical activity of the heart. The time pattern that characterizes the occurrence of successive heartbeats is also very important.

The first ECG recording device was developed by the Dutch physiologist Willem Einthoven, using a string galvanometer which was sensitive enough to record electrical potentials on the body surface. He also defined sites for electrode placement on the arms and legs which remain in use today. Since then, ECG recording has developed incredibly and become an indispensable tool in many different contexts. The ECG record is used today in a wide variety of clinical applications. Its importance has been strengthened thanks to the discoveries of subtle variability patterns which are present in rhythm or wave morphology.

The electrodes used for ECG recording are positioned so that the spatiotemporal variations of the cardiac electrical field are sufficiently well-reflected. The difference in voltage between a pair of electrodes is referred to as a lead. The ECG is typically recorded with a multiple-lead configuration. The electrode wires are connected to a differential amplifier specially designed for bioelectrical signals. The ECG ranges from a few microvolts to about 1V in magnitude. Whereas the characteristic waves of an ECG have a maximal magnitude of only few millivolts, a wandering baseline in the ECG due to variations in electrode-skin impedance may reach 1V. The amplifier bandwidth is commonly between 0.05 and 100-500Hz.

The characteristic waves of an ECG signal are shown in fig.1. Atrial depolarization is reflected by the P wave, and ventricular depolarization is reflected by the QRS complex, whereas the T wave reflects ventricular repolarization. The amplitude of a wave is measured with reference to the ECG baseline level, commonly defined by the isoelectric line which immediately precedes the QRS complex. Wave definitions of a heart beat and important wave durations and intervals.

One of the main reasons for computer-based ECG analysis is the capability to improve poor signal quality using signal processing algorithms. There are several common types of noise and artifacts in the ECG. The baseline wander is a low-frequency activity in the ECG which may interfere with the signal analysis, making the clinical interpretation inaccurate. When baseline wander takes place, ECG measurements related to the isoelectric line cannot be computed since it is not well-defined. Baseline wander is often exercise-induced and may have its origin in a variety of sources, including perspiration, respiration, body movements and poor electrode contact. The spectral content of the baseline wander is usually in the range between 0.05-1Hz but, during strenuous exercise, it may contain higher frequencies (Hargittai, S., 2008).

The electromyography noise is caused by the electrical activity of skeletal muscles during periods of contraction, commonly found in ECGs recorded during ambulatory monitoring exercise. Different muscles are active in producing the noise which corrupts the ECG signal. This kind of noise can either be intermittent in nature, due to a sudden body movement or have more stationary noise properties. The frequency components of this noise considerably overlap those of the QRS complex wave.

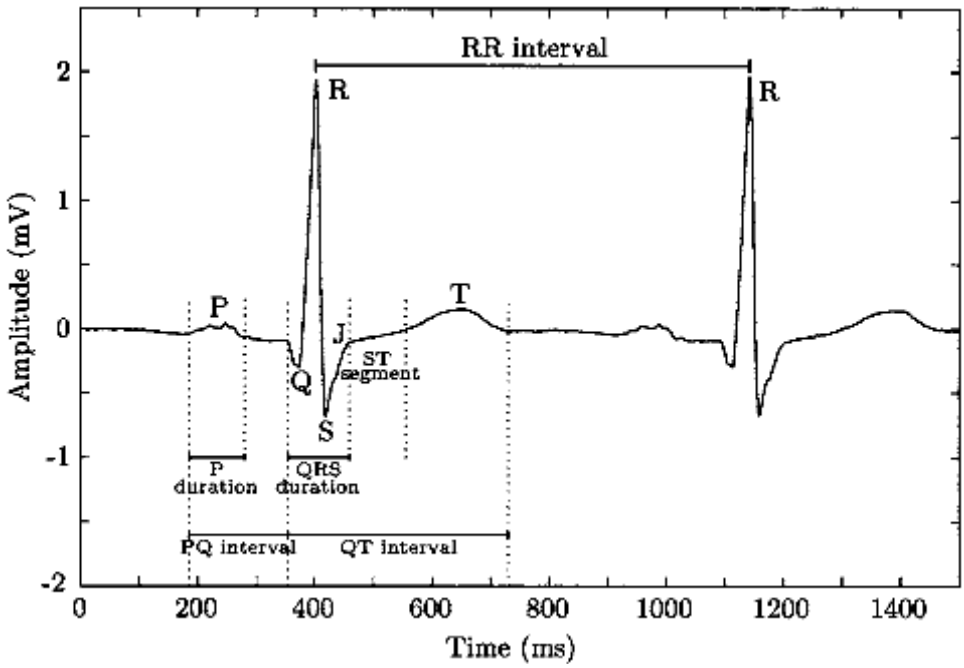

Fig. 1: ECG signal characteristics.

3 Wavelet packet analysis:

The wavelet packet method is a generalization of wavelet decomposition that offers a richer range of possibilities for signal analysis (Markovsky, Ivan A., 2008). They form bases which retains many of the orthogonality, smoothness and localization properties of their parent wavelet. The coefficients in the linear combinations are commuted by recursive algorithm, with the result that expansions in wavelet packet bases have low computation complexity.

A wavelet packet can be considered as a wave form whose oscillations persist for many cycles but are still finite. In order to apply wavelet packet analysis let us define the scaling function $\omega_0 = \varphi$ and wavelet function $\omega_1 = \psi$.

If $\{h_k\}$ and $\{g_k\}$ be two sequences of $L^2(\mathbb{Z})$ such that

$$\sum_{n\in\mathbb{Z}} h_{n-2k}\, h_{n-2l} = \delta_{k,l} \quad , \sum_{n\in\mathbb{Z}} h_n = \sqrt{2}\,, \quad g_k = (-1)^n \bar{h}_{1-k}$$

Further, let φ be a continuous and compactly supported real valued function on $\mathbb{R}$ that solves the equation

$$\varphi(x) = \sqrt{2}\sum_{k\in\mathbb{Z}} h_k \varphi(2x-k) \quad \text{with } \hat{\varphi}(0) = 1.$$

Let ψ be an associated function defined by

$$\psi(x) = \sqrt{2}\sum_{k\in Z} g_k \varphi(2x-k).$$

A family of functions $\omega_n \in L^2(\mathbb{R}),\ \ n = 0,1,2,....$ is defined from φ and ψ as follows:

$$\omega_{2n}(x) = \sqrt{2}\sum_{k\in\mathbb{Z}} h_k \omega_n(2x-k);$$

and

$$\omega_{2n+1}(x) = \sqrt{2}\sum_{k\in\mathbb{Z}} g_k \omega_n(2x-k);$$

where $\psi = \omega_1$ and $\varphi = \omega_0$ are often called mothers and fathers wavelets, are called wavelets packets. The collection $\{\omega_n(x-k) : k \in \mathbb{Z},\ n = 0,1,2,....\}$ is an orthonormal basis of $L^2(\mathbb{R})$, where

$$\omega_n(x-k) = \frac{1}{\sqrt{2}}\sum_i h_{k-2i}\,\omega_{2n}\left(\left(\frac{x}{2}\right)-i\right) + \frac{1}{\sqrt{2}}\sum_i g_{k-2i}\,\omega_{2n+1}\left(\left(\frac{x}{2}\right)-i\right)$$

For $f \in L^2(\mathbb{R})$,

$$f(x) = \sum_{j\in\mathbb{Z}} \sum_{n=2^u}^{2^{u+1}-1} \sum_{k\in\mathbb{Z}} C_{l,n,k}\,\omega_{l,n,k}(x),$$

where $l = j-u,\ u = 0, \text{if } j \le 0$ and $u = 0,1,2,\ldots,j \text{ if } j > 0,\ j \in \mathbb{Z};$ is called the wavelet packet expansion of f and $C_{l,n,k}$ the wavelet packet coefficients defined as (Na Pan, 2007)

$$C_{l,n,k} = \langle f, \omega_{l,n,k} \rangle.$$

In wavelet packet analysis, the details as well as the approximations are split. This yields more than $2^{2^{n-1}}$ different ways to encode the signal (Na Pan, 2007). This is the wavelet packet decomposition tree shown in fig.2.

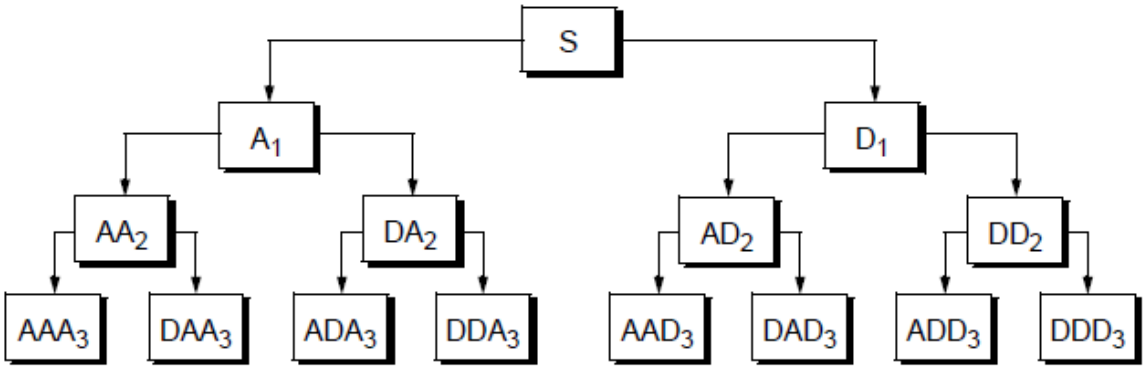

Fig. 2: Wavelet packet decomposition tree.

The wavelet decomposition tree is a part of this complete binary tree. For instance, wavelet packet analysis allows the signal S to be represented as A1 + AAD3 + DAD3 + DD2. This is an example of a representation that is not possible with ordinary wavelet analysis. Choosing one out of all these possible encodings presents an interesting problem. In this toolbox, we use an entropy-based criterion to select the most suitable decomposition of a given signal. This means we look at each node of the decomposition tree and quantify the information to be gained by performing each split.

The wavelet packet decomposition (WPD) of a signal can be viewed as a step by step transformation of the signal from the time domain to the frequency domain. The top level of the WPD is the time representation of the signal. As each level of the decomposition is calculated there is an increase in the trade-off between time and frequency resolution. The bottom level of a fully decomposed signal is a. Frequency representation.

4 Methodology:

1. Most of the ECG signals are accompanied with noise which may be moduled as Gaussian white noise. One of the most popular noises known as baseline wander, is generally found in ST segment of ECG signal. Due to presence of such type of noises, the received signal may be of very little use. Hence the process of information extraction from the ECG signal due to baseline wander is difficult task and gives incorrect information. Although many methods have been found in the literature (www.physionet.org.; Zhi-Dong, Z. and C. Yu-Quan, 2006), but these methods contribute some additional artifacts while removing baseline wander present in ECG signals. In this paper a wavelet packet transformation has been employed to recover a signal from the signal with baseline wander. The proposed algorithm involves following processes to remove the baseline drift in an ECG signal.

1. Analysis
2. Decomposition
3. Thresholding
4. Reconstruction
5. Percent Root Mean Square Difference (PRD)

4.1 Analysis:

One of the measure steps is to choose a mother wavelet, while applying wavelet packet transformation. The wavelet chosen should be similar to the signal that has to be filtered to give the best possible results. This similarity can be decided on the basis of the cross-correlation (Zhi-Dong, Z. and C. Yu-Quan, 2006) between the two functions. In this paper, one of the Daubechies family of wavelets i.e. db4 has been taken, because of their high number of vanishing moments making them capable of representing complex high degree polynomials (Sun, P., 2003; Dansereau, R.M., 2002). The result of our simulations show that db4 wavelet provide sufficiently good output.

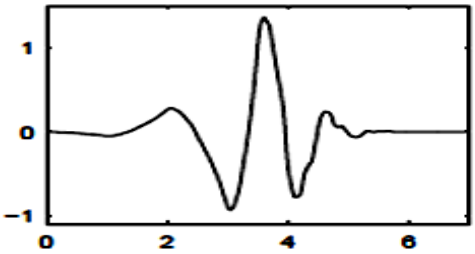

Fig. 3: Daubechies wavelet (db4).

4.2 Decomposition:

Finding the best level for decomposition is again another fundamental characteristic of denoising an ECG signal with baseline wander as noise. Here a trial and error method has been considered for proposed methodology. We first decompose the signal to the level 6, 7, 8 and 9 by db4 as mother wavelet in wavelet packet domain. The simulation is done on MATLAB platform.

4.3 Thresholding:

A discrete time signal is split up by high pass and low pass filters, which is done recursively for low pass coefficients in wavelet transform. In wavelet packet transform high pass coefficients are split as well so that the best basis can be chosen to represent the signal in few but large coefficients. The wavelet packet coefficients of noisy signals are thresholded by a non linear thresholding function, which is obtained by taking the difference of maximum value of ECG signal coefficients and mean value of ECG signal coefficients and then divide this value by 2 (Dansereau, R.M., 2002).

In the case of white noise, the threshold can be constant for all coefficients of an orthonormal basis.

4.4 Reconstruction:

After applying the wavelet packet transform and threshold procedures, the inverse wavelet packet transform was applied (Gabbanini, F., M. Vannucci, 2004; Chendeb, M., 2006; Javaid, R., 2006). In inverse process we have taken all approximation coefficients and the thresholded detailed coefficients up to level 8 to obtain the output, which give us the baseline wander free ECG signal.

4.5 Percent Root Mean Square Difference (PRD):

The performance analysis has been computed by Percent Root Mean Square Difference (PRD) method (Dansereau, R.M., 2002).

$$PRD = \sqrt{\sum_{i=1}^{N}\left(x_i - \hat{x}\right)^2 / \sum_{i=1}^{N}\left(x_i - \bar{x}\right)^2} \times 100$$

where x_i is the original standard signal and $\hat{x}_i$ is the reconstructed signal $\bar{x}_i$ is the mean signal. The above step is repeated for 6th, 7th, 8th and 9th level of decomposition. The results are shown in the Table 4.1. We find that the average is decrease monotonically till the level 8 and then start increasing with further increases of level. On observing the table we conclude that we get the best result for db4 wavelet when signal is decompose to level eight.

Table 4.1: PRD value (%) for different decompose level 7, 8 and 9.

Artificial baseline	Level 6	Level 7	Level 8	Level 9
B0	1.3243	1.6831	0.2708	1.5386
B1	1.4321	1.6820	0.2753	1.8613
B2	1.4129	1.5831	0.3832	0.8579
Average	1.4193	1.6494	0.3097	1.4192

5 Simulation and Results:

For the simulation of proposed method, an ECG signal has been taken from the MIT/BIH ECG database (www.physionet.org). All segments are of 360 Hz sampling rate and also present quite important baseline deviation. In addition, the segments include both normal and abnormal heartbeats. In this paper, we have taken an ECG record 108 and add some artificially constructed baseline i.e. B0 is a 0.1Hz sin wave, B1 is a 0.05Hz triangular wave and B2 is a 0.05Hz sin wave. After applying proposed methodology, we obtained that wavelet packet transform reduces baseline wander greatly and we obtained noise free ECG signals which are shown below.

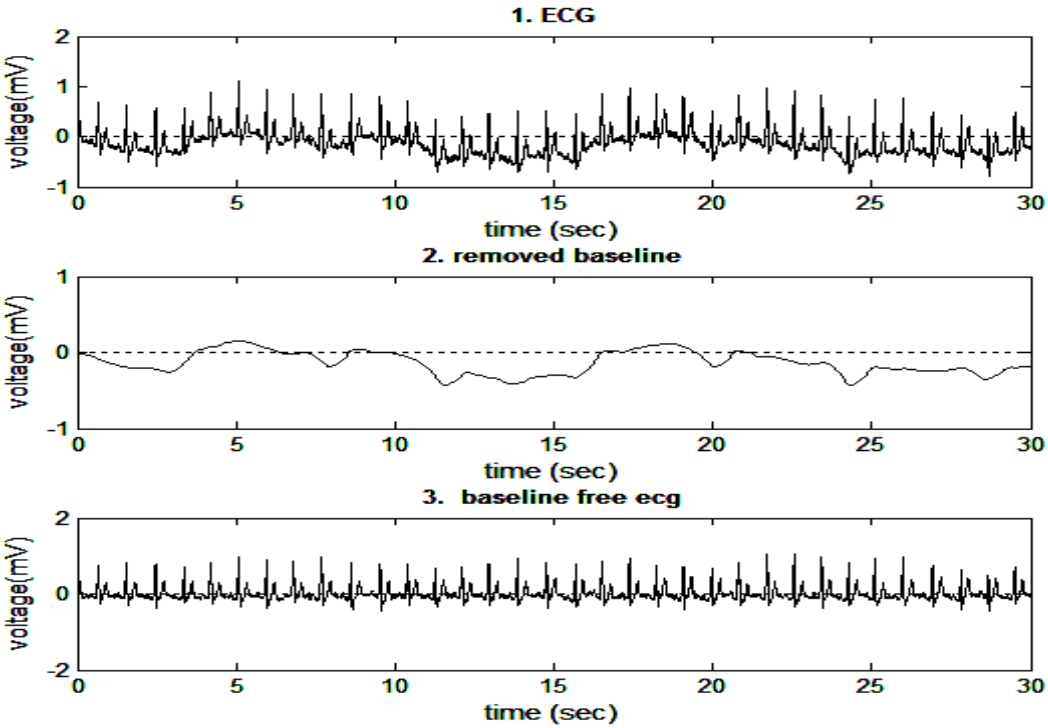

Fig. 4: ECG_1 MITBIH rec.108 with B0 baseline.

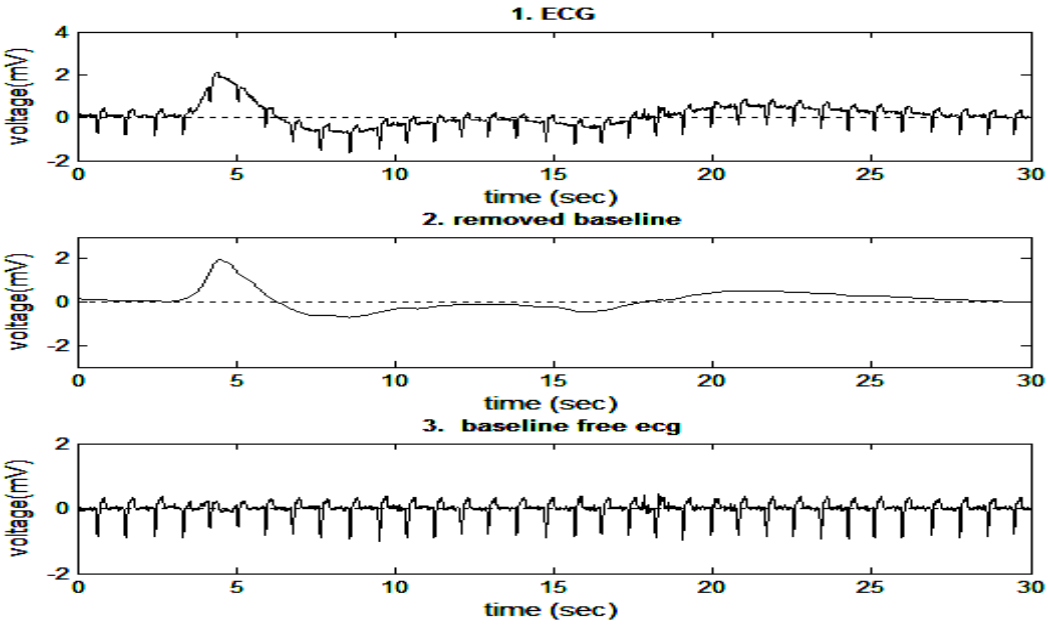

Fig. 5: ECG_2 MITBIH rec.108 with B1baseline.

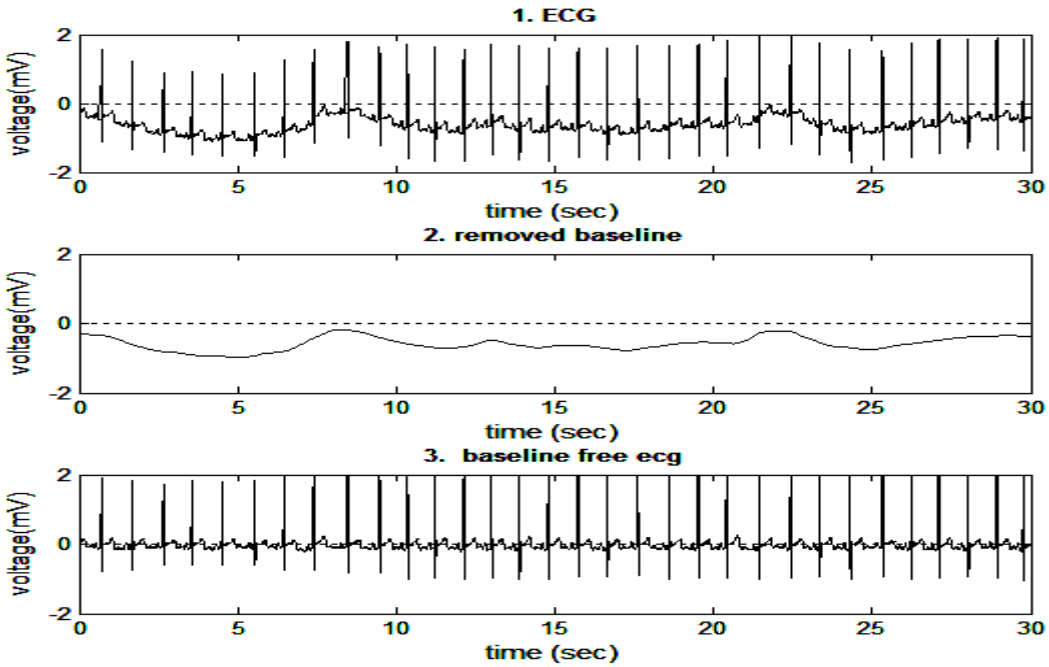

Fig. 6: ECG_3 MITBIH rec.108 with B2 baseline.

6. Conclusion:

Estimation of baseline wander is an important task for the proper analysis of patient's heart conditions. Wavelet packet is considered one of the preferred technique for estimation of baseline wander in ECG signal. In the wavelet packet transform proper estimation is important for preserving ECG signal characteristics. In the present work wavelet packet transform has been used for the estimation of baseline wander in ST segment of ECG signal. Percentage root mean difference is computed for different levels using MATLAB 7.0. The simulation result shows that level 8 is best for correct estimation of baseline wander in ST segment of ECG signal.

REFERENCES

Arunachalam, S.P., L.F. Brown, 2009. Real-Time Estimation of the ECG Derived Respiration Signal Using A New Algorithm for Baseline Wander Noise Removal, IEEE Conference of Engineering in Medicine and Biology Society, 5681-5684.

Berbari, J.E., 2000. Principles of Electrocardiography, IEEE Press, The Biomedical Engineering Handbook, 1: 13-11.

Chendeb, M., K. Mohamad, D. Jacques, 2006. Methodology of Wavelet Packet Selection for Event Detection, Signal Processing archive, 86(12): 3826-3841.

Dansereau, R.M., W. Kinsnea and V. Clevher, 2002. Wavelet Packet Best Basis Search Using Generalized Renyi Entropy, Proceedings of the IEEE Canadian Conference *on* Electrical & Computer Engineering, 1005-1008.

Daqrouq, K., 2005. ECG Baseline Wandering Reduction Using Discrete Wavelet Transform, Asian Journal of Information Technology, 4(11): 989-995.

Gabbanini, F., M. Vannucci, 2004. Wavelet packet methods for the analysis ofvariance of time series with application to crack widths on the Brunelleschi dome, Journal of Computational & Graphical Statistics, pp: 187-190.

Hargittai, S., 2008. Efficient and Fast ECG Baseline Wander Reduction Without Distortion Of Important Clinical Information, IEEE Conferences on Computers in Cardiology, 841-844.

Heart, J., 2002. Common Electrocardiographic Artifacts Mimicking Arrhythmias in Ambulatory Monitoring.

Javaid, R., R. Besar and F.S. Abas, 2006. Performance Evaluation of Percent Root Mean Square Difference for ECG Signals Compression, Signal Processing: An International Journal, 2(2): 1-9.

Markovsky, Ivan A., Anton, Van H. and Sabine, 2008. Application of Filtering Methods for Removal of Resuscitation Artifacts from Human ECG Signals, IEEE Conference of Engineering in Medicine and Biology Society, 13-16.

Min Dai and Shi-Liu Liana, 2009. Removal of Baseline Wander from Dynamic Electrocardiogram Signals, IEEE Conference on Image and Signal Processing, 1-4.

Na Pan, Vai Mang I., Mai Peng Un and Pun Sio hang, 2007. Accurate Removal of Baseline Wander in ECG Using Empirical Mode Decomposition, IEEE International Conference on Functional Biomedical Imaging, 177-180.

Pandit, S.V., 1996. ECG baseline drift removal through STFT, in Proc. 18th International Conference of the IEEE Engineering in Medicine and Biology Society, Amsterdam, Netherlands, 1405-1406.

Sayadi, O., B.S. Mohammad, 2007. ECG Baseline Correction with Adaptive Bionic Wavelet Transform, IEEE International Symposium on Signal Processing and Its Application, 1-4.

Sun, P., Q.H. Wu, A.M. Weindling, A. Finkelstein, K. Ibrahim, 2003. An Improved Morphological Approach to Background Normalization of ECG Signals, IEEE Transactions on Biomedical Engineering, 50(1): 117 -121.

Thom, T., N. Haase, W. Rosamond and *et al*, 2006. Heart disease and stroke statistics update: A report from the American heart association statistics committee and stroke statistics subcommittee, 113(6): 85-151.

www.physionet.org.

Zhang, D., 2005. Wavelet Approach for ECG Baseline Wander Correction and Noise Reduction, Proceedings of the IEEE on Engineering in Medicine and Biology 27th Annual Conference, 1212-1215.

Zhi-Dong, Z. and C. Yu-Quan, 2006. A New Method for Removal of Baseline Wander and Power Line Interference in ECG Signals, IEEE conferences on Machine Learning and Cybernetics, 4342-4347.